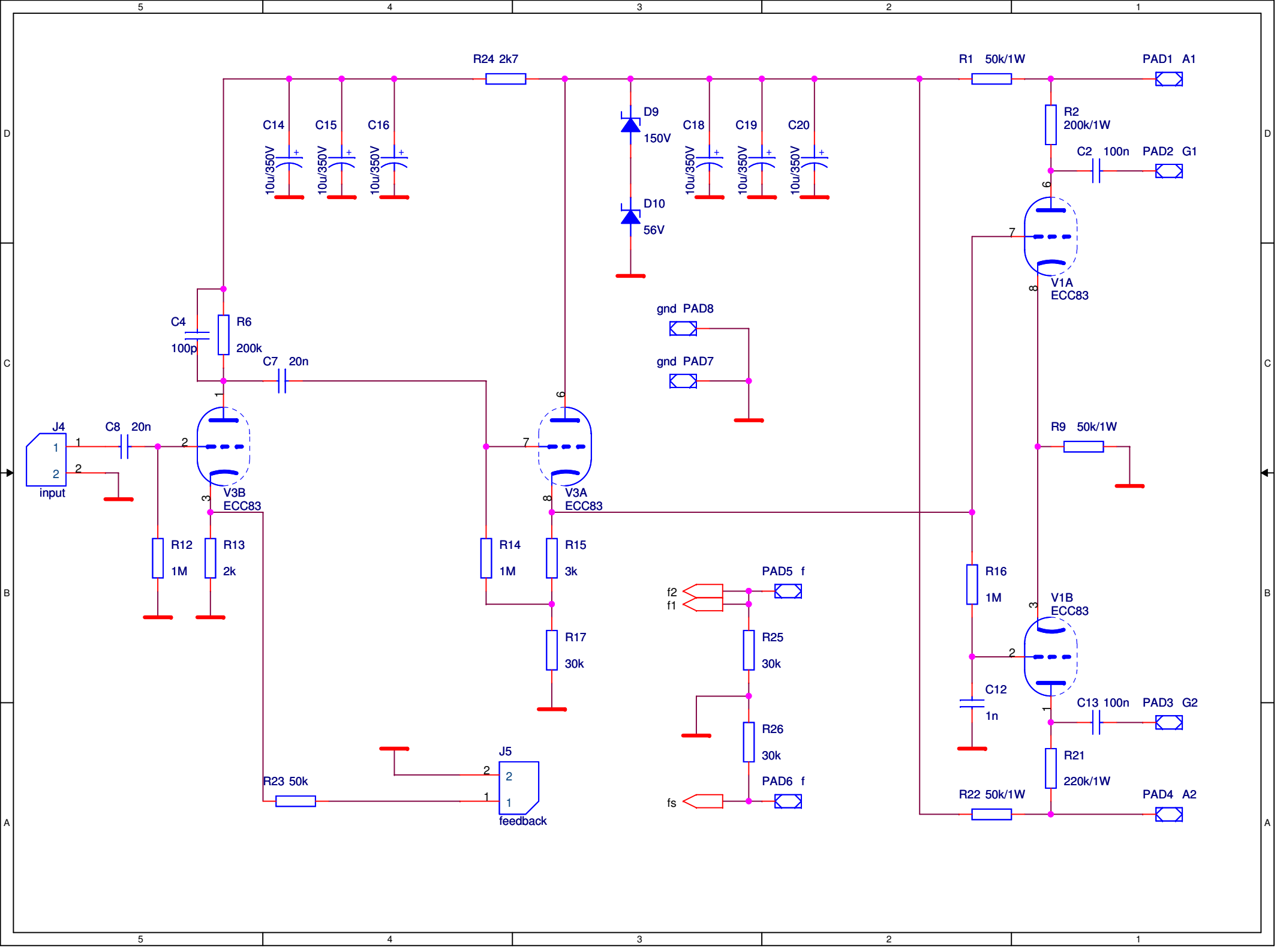
R24 2k7
R1 50k/1W
PAD1 A1
C14
10u/350V
C15
10u/350V
C16
10u/350V
D9
150V
D10
56V
C18
10u/350V
C19
10u/350V
C20
10u/350V
R2
200k/1W
C2 100n
PAD2 G1
V1A
ECC83
gnd PAD8
gnd PAD7
C4
100p
R6
200k
C7 20n
J4
input
C8 20n
V3B
ECC83
V3A
ECC83
R9 50k/1W
R12
1M
R13
2k
R14
1M
R15
3k
R16
1M
V1B
ECC83
PAD5 f
f2
f1
R17
30k
R25
30k
C12
1n
C13 100n
PAD3 G2
R26
30k
R21
220k/1W
J5
feedback
R23 50k
PAD6 f
fs
R22 50k/1W
PAD4 A2