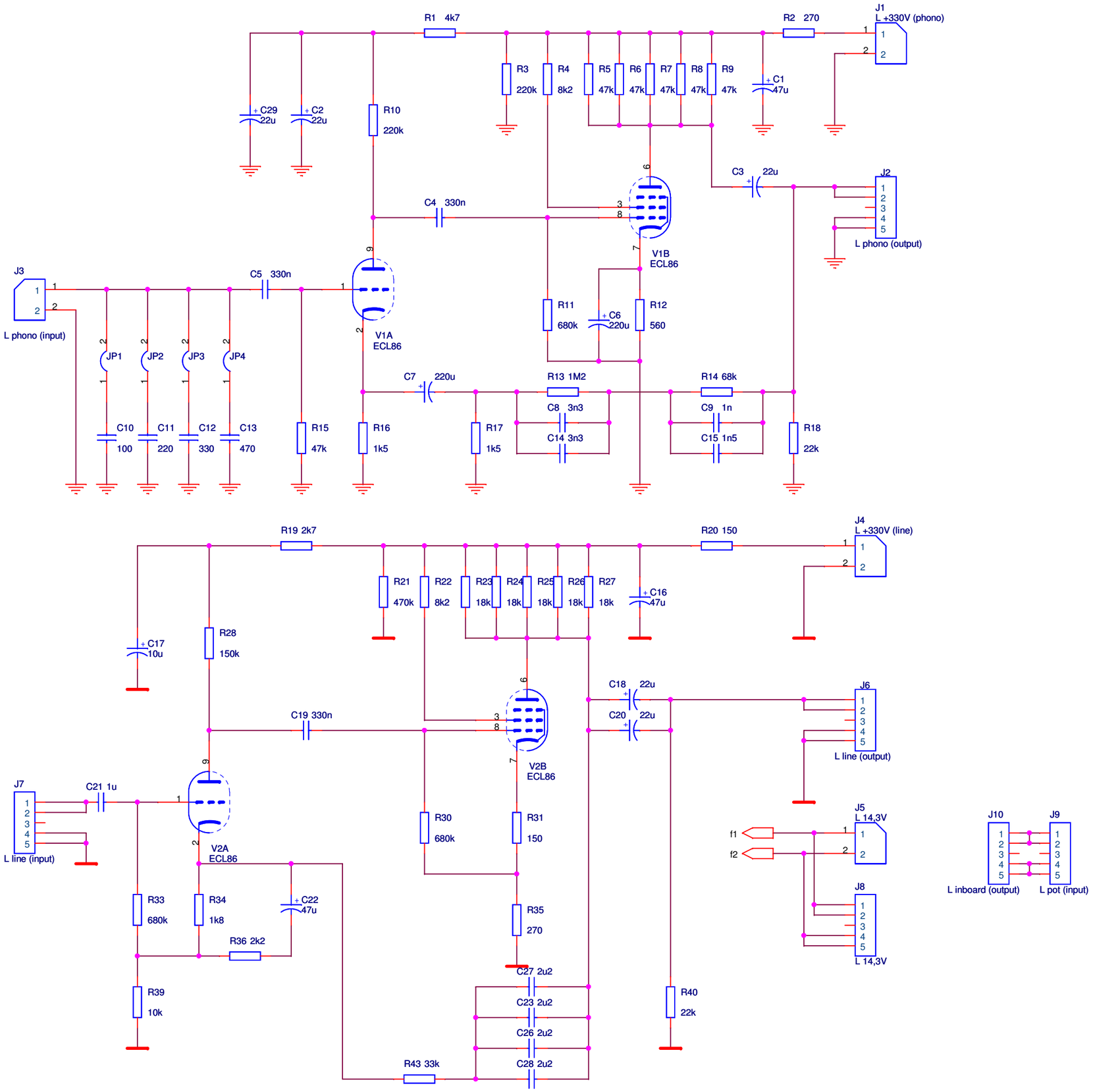
R1 4k7
R2 270
J1
L +330V (phono)
R3 220k
R4 8k2
R5 47k
R6 47k
R7 47k
R8 47k
R9 47k
C1 47u
C29 22u
C2 22u
R10 220k
C3 22u
J2
L phono (output)
C4 330n
V1B
ECL86
J3
L phono (input)
C5 330n
V1A
ECL86
R11 680k
C6 220u
R12 560
JP1
JP2
JP3
JP4
C7 220u
R13 1M2
R14 68k
C8 3n3
C14 3n3
C9 1n
C15 1n5
C10 100
C11 220
C12 330
C13 470
R15 47k
R16 1k5
R17 1k5
R18 22k
R19 2k7
R20 150
J4
L +330V (line)
R21 470k
R22 8k2
R23 18k
R24 18k
R25 18k
R26 18k
R27 18k
C16 47u
C17 10u
R28 150k
C18 22u
C20 22u
J6
L line (output)
C19 330n
V2B
ECL86
J7
L line (input)
C21 1u
V2A
ECL86
R30 680k
R31 150
J5
L 14,3V
f1
f2
J8
L 14,3V
J10
L inboard (output)
J9
L pot (input)
R33 680k
R34 1k8
C22 47u
R36 2k2
R35 270
R39 10k
C27 2u2
C23 2u2
C26 2u2
C28 2u2
R40 22k
R43 33k