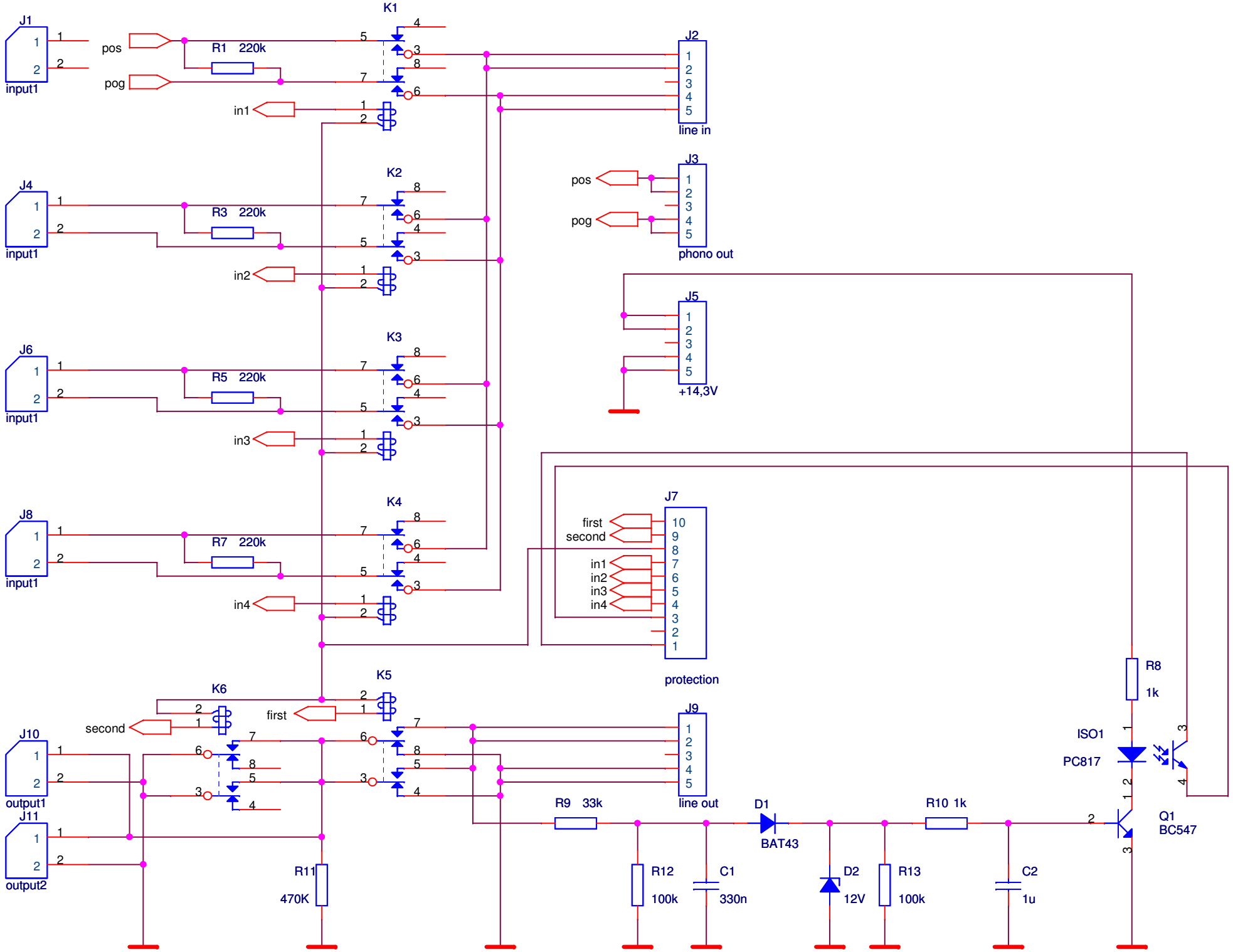
J1
input1
pos
pog
R1 220k
K1
in1
J2
line in
J4
input1
R3 220k
K2
in2
J3
phono out
J5
+14,3V
J6
input1
R5 220k
K3
in3
J8
input1
R7 220k
K4
in4
J7
protection
first
second
in1
in2
in3
in4
K6
K5
J10
output1
J11
output2
J9
line out
R8
1k
ISO1
PC817
Q1
BC547
R9 33k
D1
BAT43
R10 1k
R11
470K
R12
100k
C1
330n
D2
12V
R13
100k
C2
1u